Marking tape 75 mm



TECHNICAL SPECIFICATIONS

Overall width (B)	75 mm
Length	33000 mm
Thickness	0.17–0.2 mm
Material	PVC
Colour	White / Yellow / Blue / Red / Green / Orange / Red/White / Yellow/Black / Green/White
Weight	0.5–0.6 kg

DIMENSIONS

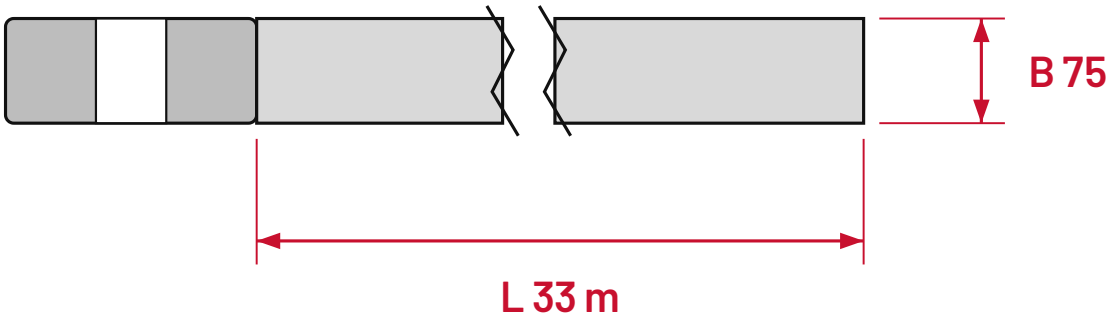

mm

B Overall width **L** Length
All dimensions in mm

AVAILABLE VERSIONS

Item no. · Weight

Width / Colour	White	Yellow	Blue	Red	Green	Orange	Red/White	Yellow/Black	Green/White
75 mm	**261.16.619** White	**261.18.798** Yellow	**261.15.989** Blue	**261.18.675** Red	**261.16.655** Green	**261.17.531** Orange	**261.15.954** Red/White	**261.13.438** Yellow/Black	**261.19.066** Green/White