Marking tape 50 mm



TECHNICAL SPECIFICATIONS

Overall width (B)	50 mm
Length	33000 mm
Thickness	0.15 mm
Material	PVC
Colour	White / Yellow / Blue / Red / Green / Orange / Red/White / Yellow/Black / Green/White
Weight	0.3–0.4 kg

DIMENSIONS

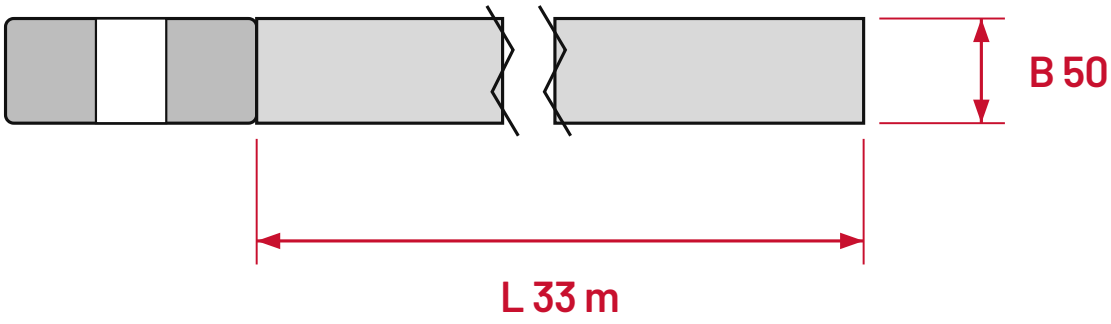

mm

B Overall width **L** Length
All dimensions in mm

AVAILABLE VERSIONS

Item no. · Weight

Width / Colour	White	Yellow	Blue	Red	Green	Orange	Red/White	Yellow/Black	Green/White
50 mm	**261.16.606** White	**261.13.796** Yellow	**261.19.771** Blue	**261.13.752** Red	**261.18.249** Green	**261.16.322** Orange	**261.18.826** Red/White	**261.17.941** Yellow/Black	**261.17.310** Green/White